In-Product Features for Resource Saving

Promotion of 3R Design

Implementing 3R Design in All Products

To achieve the efficient use of finite resources, Toyota Industries promotes design and development that implements the 3Rs: Reduce materials used by using them more efficiently, Reuse products and parts that have completed their service life, and Recycle resources.

Vehicles and automobile parts manufactured by Toyota Industries last for approximately 10 years, lift trucks for approximately 15 years, and textile machinery for 20 years or more. To facilitate the reuse and recycling of these products when they have reached the end of their service lives and are to be disposed of, Toyota Industries pursues such measures as safe and efficient dismantling operations and making disposal easy from the development and design stages.

In 2001, Toyota Industries created its Recycling-Oriented Design Guidelines, which detailed the areas to be considered during design, as well as methods assessing the recyclability. In April 2004, the principles of Reduce and Reuse were added to these Guidelines and they became the 3R Design Guidelines. At the same time, the company established detailed in-house standards regarding the principles of 3R-oriented design and development. In fiscal year 2007, Toyota Industries' aim was the further promotion of 3R Design. To achieve that aim, it has upgraded the 3R Design Checklist, which is used for 3R assessment in the various stages of development, and revised its in-house standards.

A large number of 3R design elements have been incorporated into the new GENEO (8FG/D outside Japan) lift truck, including the use of recyclable materials for the counterweight, improvements in the ease of dismantling the head light, and the extension of the oil change cycles. In this way, the new GENEO is making a significant contribution to the efficient use of finite resources.

Case Study: Improving the Recycling Rate of Reuse Parts – ACTIS Manufacturing

ACTIS Manufacturing, a joint-venture company established by Toyota Industries, Denso Corporation, and Toyota Tsusho Corporation, produces remanufactured compressors for the North American compressor aftermarket. In this business, which began in March 2002, used car air-conditioning compressors recovered from the market are dismantled, defective parts are replaced, and the compressors are re-assembled.

In January 2003 ACTIS began working on improving its reuse rate of parts and is currently reviewing its criteria for the assessment of part reusability with the goals of reducing environmental impact and improving profitability. To date, the company has examined ways of increasing the reusability rates for swash plates, front housings, pistons, and cylinders. As a result, it has expanded the scope of its assessment criteria for pistons and cylinders, thereby increasing the recycling rates of these parts.

While continuing its examinations on other parts, it is also working on ways of repairing and reusing parts that have been initially assessed as being unsuitable for reuse, instead of simply disposing of them.

The ACTIS building

Compressor Parts (Swash Plate Type)

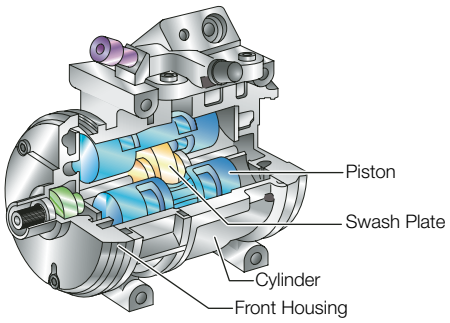

ACTIS Remanufacturing Flow